xE50-433/868 RF Module User Guide

1VV0300905 Rev.13 – 2015-07-28

Making machines talk.

APPLICABILITY TABLE

PRODUCT
LE50-433
LE50-868
NE50-868
NE50-433
ME50-868

SPECIFICATIONS SUBJECT TO CHANGE WITHOUT NOTICE

Notice

While reasonable efforts have been made to assure the accuracy of this document, Telit assumes no liability resulting from any inaccuracies or omissions in this document, or from use of the information obtained herein. The information in this document has been carefully checked and is believed to be entirely reliable. However, no responsibility is assumed for inaccuracies or omissions. Telit reserves the right to make changes to any products described herein and reserves the right to revise this document and to make changes from time to time in content hereof with no obligation to notify any person of revisions or changes. Telit does not assume any liability arising out of the application or use of any product, software, or circuit described herein; neither does it convey license under its patent rights or the rights of others.

It is possible that this publication may contain references to, or information about Telit products (machines and programs), programming, or services that are not announced in your country. Such references or information must not be construed to mean that Telit intends to announce such Telit products, programming, or services in your country.

Copyrights

This instruction manual and the Telit products described in this instruction manual may be, include or describe copyrighted Telit material, such as computer programs stored in semiconductor memories or other media. Laws in the Italy and other countries preserve for Telit and its licensors certain exclusive rights for copyrighted material, including the exclusive right to copy, reproduce in any form, distribute and make derivative works of the copyrighted material. Accordingly, any copyrighted material of Telit and its licensors contained herein or in the Telit products described in this instruction manual may not be copied, reproduced, distributed, merged or modified in any manner without the express written permission of Telit. Furthermore, the purchase of Telit products shall not be deemed to grant either directly or by implication, estoppel, or otherwise, any license under the copyrights, patents or patent applications of Telit, as arises by operation of law in the sale of a product.

Computer Software Copyrights

The Telit and 3rd Party supplied Software (SW) products described in this instruction manual may include copyrighted Telit and other 3rd Party supplied computer programs stored in semiconductor memories or other media. Laws in the Italy and other countries preserve for Telit and other 3rd Party supplied SW certain exclusive rights for copyrighted computer programs, including the exclusive right to copy or reproduce in any form the copyrighted computer program. Accordingly, any copyrighted Telit or other 3rd Party supplied SW computer programs contained in the Telit products described in this instruction manual may not be copied (reverse engineered) or reproduced in any manner without the express written permission of Telit or the 3rd Party SW supplier. Furthermore, the purchase of Telit products shall not be deemed to grant either directly or by implication, estoppel, or otherwise, any license under the copyrights, patents or patent applications of Telit or other 3rd Party supplied SW, except for the normal non-exclusive, royalty free license to use that arises by operation of law in the sale of a product.

Usage and Disclosure Restrictions

License Agreements

The software described in this document is the property of Telit and its licensors. It is furnished by express license agreement only and may be used only in accordance with the terms of such an agreement.

Copyrighted Materials

Software and documentation are copyrighted materials. Making unauthorized copies is prohibited by law. No part of the software or documentation may be reproduced, transmitted, transcribed, stored in a retrieval system, or translated into any language or computer language, in any form or by any means, without prior written permission of Telit

High Risk Materials

Components, units, or third-party products used in the product described herein are NOT fault-tolerant and are NOT designed, manufactured, or intended for use as on-line control equipment in the following hazardous environments requiring fail-safe controls: the operation of Nuclear Facilities, Aircraft Navigation or Aircraft Communication Systems, Air Traffic Control, Life Support, or Weapons Systems (High Risk Activities"). Telit and its supplier(s) specifically disclaim any expressed or implied warranty of fitness for such High Risk Activities.

Trademarks

TELIT and the Stylized T Logo are registered in Trademark Office. All other product or service names are the property of their respective owners.

Copyright © Telit Communications S.p.A. 2011.

Contents

1. Introduction 7
- 1.1. Scope 7
- 1.2. Audience 7
- 1.3. Contact Information, Support 7
- 1.4. Document Organization 8
- 1.5. Text Conventions 8
- 1.6. Related Documents 9

2. Requirements 10
- 2.1. General Requirements 10
- 2.2. 433 MHz band Requirements 10
- 2.3. 868 MHz band Requirements 12
- 2.4. Other Requirements 14
- 2.5. Functional Requirements 14
- 2.6. Software 14
- 2.7. Temperature Requirements 14

3. General Characteristics 15
- 3.1. Mechanical Characteristics 15
- 3.2. Mechanical dimensions 16
- 3.3. Recommended Land pattern 16
- 3.4. DC Characteristics 17
- 3.5. LE50-433 Functional Characteristics 18
- 3.6. LE50-868 Functional Characteristics 20
- 3.7. NE50-433 Functional Characteristics 23
- 3.8. NE50-868 Functional Characteristics 25
- 3.9. ME50-868 Functional Characteristics 26
- 3.10. Digital Characteristic 27
- 3.11. Absolute Maximum Ratings 27
- 3.12. Ordering Information 28

4. Technical Description 30
- 4.1. Module Top View (cover side) 30
- 4.2. Pin-out of the module LE50-433 and LE50-868 31

4.3. Pin-out of the module NE50-433 and NE50-868 32
4.4. Pin-out of the module ME50-868 33
4.5. Pin-out of the DIP Module 34
4.6. Description of the signals 35

5. Process Information 36
5.1. Delivery 36
5.2. Storage 37
5.3. Moisture sensibility 37
5.4. Additional Precautions 37
5.5. Soldering pad pattern 37
5.6. Solder paste 38
5.7. PCB pad design 39
5.8. PCB pad dimensions 39
5.9. Placement 39
5.10. Soldering Profile (RoHS Process) 40

6. Board Mounting Recommendation 42
6.1. Electrical environment 42
6.2. Power supply decoupling on xE50-433/868 module 42
6.3. RF layout considerations 43
6.4. Antenna connections on printed circuit boards 44
6.5. xE50-433/868 Interfacing 45

7. Annexes 46
7.1. Examples of propagation attenuation 46
7.2. Declaration of conformity 47

8. Safety Recommendations 48

9. Glossary 49

10. Document History 50

1. Introduction

1.1. Scope

Scope of this document is to present the features and the application of the Telit xE50-433/868 radio modules (LE50-433, LE50-868, NE50-433, NE50-868 and ME50-868).

1.2. Audience

This document is intended for developers using Telit xE50-433/868 radio modules.

1.3. Contact Information, Support

For general contact, technical support, to report documentation errors and to order manuals, contact Telit Technical Support Center (TTSC) at:

TS-SRD@telit.com
TS-NORTHAMERICA@telit.com
TS-LATINAMERICA@telit.com
TS-APAC@telit.com

Alternatively, use:

http://www.telit.com/en/products/technical-support-center/contact.php

For detailed information about where you can buy the Telit modules or for recommendations on accessories and components visit:

http://www.telit.com

To register for product news and announcements or for product questions contact Telit Technical Support Center (TTSC).

Our aim is to make this guide as helpful as possible. Keep us informed of your comments and suggestions for improvements.

Telit appreciates feedback from the users of our information.

1.4. Document Organization

This document contains the following chapters

“Chapter 1: “Introduction” provides a scope for this document, target audience, contact and support information, and text conventions.

“Chapter 2: “Requirements” gives an overview of the limitations imposed by Reference standards.

“Chapter 3: “General Characteristics” describes in details the characteristics of the product.

“Chapter 4: “Technical Description” describes in details the signals and pin-out of the product.

“Chapter 5: “Process information” describes in details the delivery, storage, soldering and placement of the product.

“Chapter 6: “Board Mounting Recommendations” describes in details the interface and coupling of the product.

“Chapter 7: “Annexes” describes examples of propagation attenuation.

“Chapter 8: “Safety Recommendations” describes recommendation for proper usage.

“Chapter 9: “Glossary” shows acronyms used in the document.

“Chapter 10: “Document history” describes the revision history of the document.

1.5. Text Conventions

STOP

Danger – This information MUST be followed or catastrophic equipment failure or bodily injury may occur.

⚠

Caution or Warning – Alerts the user to important points about integrating the module, if these points are not followed, the module and end user equipment may fail or malfunction.

ℹ

Tip or Information – Provides advice and suggestions that may be useful when integrating the module.

All dates are in ISO 8601 format, i.e. YYYY-MM-DD.

1.6. Related Documents

- [1] EN 300 220-2 v2.3.1, ETSI Standards for SRD , February 2010
- [2] ERC Rec 70-03, ERC Recommendation for SRD, June 2010
- [3] 2002/95/EC, Directive of the European Parliament and of the Council, 27 January 2003
- [4] SR Tool User Guide, 1vv0300899
- [5] 2006/771/EC, Harmonization of the radio spectrum for use by short-range devices
- [6] 2009/381/EC, Amending Decision 2006/771/EC on harmonization of the radio spectrum for use by short-range devices
- [7] Star Network Protocol Stack User Guide, 1vv0300873
- [8] Low Power Mesh Protocol Stack User Guide, 1vv0300944
- [9] Wireless M-Bus Part4+Part5 ModeR2 User Guide 1vv0300828
- [10] Wireless M-Bus Part 5 Mode Q User Guide 1vv0300935
- [11] EN 13757-4 : 2013 Wireless M-Bus
- [12] Telit_Wireless_M-bus_2013_Part4_User_Guide 1vv0300953

2. Requirements

2.1. General Requirements

The LE50-433, LE50-868, NE50-868 and ME50-868 (or simply xE50-433/868) modules are multi-band radio boards, delivering up to 25 mW in the 868 MHz ISM band (unlicensed frequency band).

They are delivered with preloaded protocol stacks:

- LE50-433 and LE50-868: “Star Network” Protocol stack
- NE50-433 and NE50-868: “Low Power Mesh” Protocol stack
- ME50-868: “Wireless M-Bus Part4+Part5 ModeR2” Protocol stack, “Wireless M-Bus Part 5 Mode Q” Protocol stack and “Wireless M-Bus Part4:2013 Protocol stack.

LE50-433, LE50-868, NE50-433, NE50-868 and ME50-868 are pin-to-pin compatible with LE, NE and ME modules working at different frequencies.

LE50-433, LE50-868, NE50-433, NE50-868 and ME50-868 are also pin-to-pin compatible with Telit ZE Family (ZigBee PRO stack).

2.2. 433 MHz band Requirements

The “ERC recommendation 70-03” describes the 433 MHz license free band, in terms of bandwidth, maximum power, duty cycle and channel spacing. It gives the following limitations:

ERC recommendation 70-03				
Band	***Frequency band (MHz)***	***Maximum radiated power (mW)***	***Channel spacing (kHz)***	***Duty cycle (%)***
1f	433.050 – 434.790	10	No channel spacing specified	10
1f1	433.050 – 434.790	1 (-13dBm/10kHz)	No channel spacing specified	100
1f2	434.040 – 434.790	10	25	100

These bands are free to use but the module and the user must respect some limitations. Most of these restrictions are integrated in the conception of the module, except the duty cycle. For example, the 1e band is limited to a 10% duty cycle. This means that each module is limited to a total transmit time of 6 minutes per hour. It is the responsibility of the user to respect the duty cycle. Band 1e2 is not applicable due to 25 kHz channel spacing.

National Restrictions for non specific SR devices Annex 1 band F:

Country	**Restriction**	**Reason/Remark**
Band F		
Georgia	Limited Implementation	
Italy	Limited Implementation	Audio applications are limited in the range 433.05-433.575 MHz with 12.5 or 25 KHz channel spacing
Luxemburg	Limited Implementation	No Audio and no voice
Russian Federation	Limited Implementation	433.05-434.790. Possible use of low power stations and devices for processing of bar-codes
Ukraine	Limited implementation	The maximal transmitter power 10mW
Band F1		
Georgia	Limited Implementation	
Italy	Limited Implementation	Audio applications are limited in the range 433.05-433.575 MHz with 12.5 or 25 KHz channel spacing
Luxemburg	Limited Implementation	No Audio and no voice
Russian Federation	Not implemented	
Ukraine	Limited implementation	The maximal transmitter power 10mW
Band F2		
France	Not implemented	
Georgia	Limited Implementation	
Luxemburg	Implemented	(Notification Number: 2009/375/L)
Russian Federation	Not implemented	
Ukraine	Limited implementation	The maximal transmitter power 10mW

2.3. 868 MHz band Requirements

The “ERC recommendation 70-03” describes also the different usable sub-bands in the 868 MHz license free band, in terms of bandwidth, maximum power, duty cycle and channel spacing. LE50-868 can operate on Annex 1 bands where “ERC recommendation 70-03” gives the following limitations.

ERC recommendation 70-03				
Band	***Frequency band (MHz)***	***Maximum radiated power (mW)***	***Channel spacing (kHz)***	***Duty cycle (%)***
Annex1 g	863.0 – 870.0	25	=< 100 for 47 or more channels	100
Annex1 g1	868.0 – 868.6	25	No channel spacing specified	1
Annex1 g2	868.7 - 869.2	25	No channel spacing specified	0,1
Annex1 g3	869.4 - 869.65	500	25 (for 1 or more channels)	10
Annex1 g4	869.7 – 870.0	5	No channel spacing specified	100

These bands are free to use but the module and the user must respect some limitations. Most of these restrictions are integrated in the conception of the module, except the duty cycle. For example, the 869.400 to 869.650 MHz band is limited to a 10% duty cycle. This means that each module is limited to a total transmit time of 6 minutes per hour. It is the responsibility of the user to respect the duty cycle.

National Restrictions for non specific SR devices Annex 1 band g1-g4:

Country	Restriction	Reason/Remark
Band G		
Austria	Not Implemented	Planned
Finland	Limited Implementation	Audio, video and voice not allowed - Planned 2011
Georgia	Not Implemented	
Greece	Limited Implementation	to 863-865 MHz
Lithuania	Limited implementation	Only 863-868 MHz and duty cycle can not be increased to 1%
Norway	Not implemented	
Russian Federation	Not Implemented	864-865 MHz with max e.r.p 25 mW, duty cycle 0.1% or LBT. Forbidden to use at the airports (aerodromes)
Spain	Limited implementation	to the band 863-868 MHz
Sweden	Not Implemented	
The Netherlands	Not Implemented	Under study
Ukraine	Limited implementation	863-865 / 868-868.6 / 868.6-868.7 / 869.2-869.25 MHz
Band G1		
Georgia	Not Implemented	
Russian Federation	Not Implemented	
Ukraine	Not Implemented	e.i.r.p. ≤25 mW
Band G3		
Georgia	Not Implemented	
Russian Federation	Not Implemented	
Ukraine	Not Implemented	
Band G4		
Finland	Limited implementation	Only 5mW e.r.p. - Planned 2011
Georgia	Not Implemented	
Russian Federation	Not Implemented	
Ukraine	Not Implemented	

2.4. Other Requirements

Furthermore, the module complies with the ETSI 300-220-2 v2.3.1 standards (specific for SRD) which main requirements are described in Appendix 1. ME50-868 also complies which EN 13757-4 standards (Wireless M-Bus Part4).

Finally, the module complies with the new European Directive 2002/95/EC concerning the Restrictive Usage of Hazardous Substances (RoHS).

2.5. Functional Requirements

The xE50-433/868 module is a complete solution from serial interface to RF interface. The xE50-868 module has a digital part and a RF part. The radio link is a Half Duplex bi-directional link.

The digital part has the following functionalities:

- Communication interface
- I/O management
- Micro controller with embedded Telit Software Stack

The RF part has the following functionalities:

- Frequency synthesis
- Front-end
- Low noise reception
- Power amplification
- Packet handling

2.6. Software

The xE50-433/868 module is provided pre-flashed with one of the available Telit in-house Protocol Stack.

Please refer to Protocol Stack User Guides [7], [8], [9], [10] or [12] for detailed information.

2.7. Temperature Requirements

	Minimum	*Typical*	*Maximum*	*Unit*
Operating				
Temperature	- 40	25	+ 85	°C
Relative humidity @ 25°C	20		75	%
Storage				
Temperature	- 40	25	+ 85	°C

3. General Characteristics

3.1. Mechanical Characteristics

Size :	Rectangular 25.8 x 15 mm
Height :	3 mm
Weight :	1.7 g
PCB thickness:	0.8 mm
Cover :	• Dimensions : 21 x 14.2 x 2.2mm • Thickness : 200µm
Components :	All SMD components, on one side of the PCB.
Connectors :	The terminals allowing conveying I/O signals are LGA
Mounting :	• SMD • LGA on the 4 external sides
Number of pins :	30

3.2. Mechanical dimensions

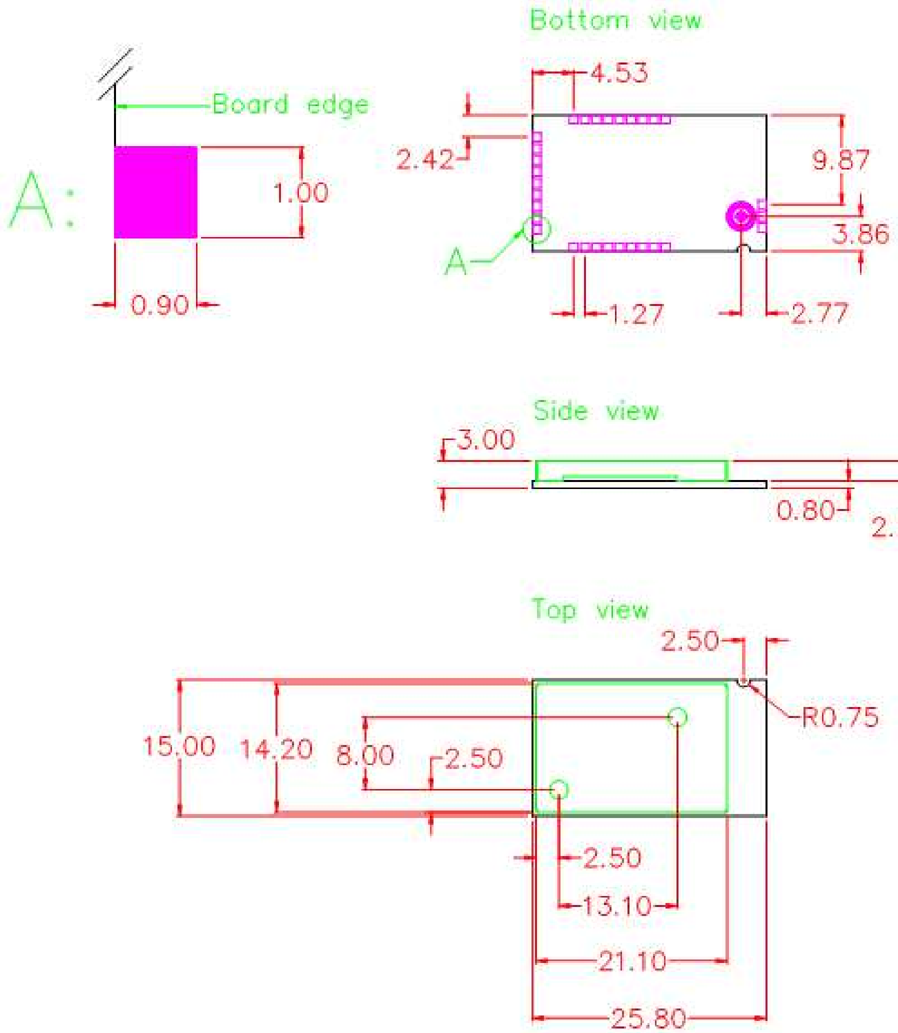
Bottom view
Board edge
A:
1.00
0.90
4.53
2.42
9.87
3.86
A
1.27
2.77
Side view
3.00
0.80
2.20
Top view
2.50
R0.75
15.00
14.20
8.00
2.50
2.50
13.10
21.10
25.80

3.3. Recommended Land pattern

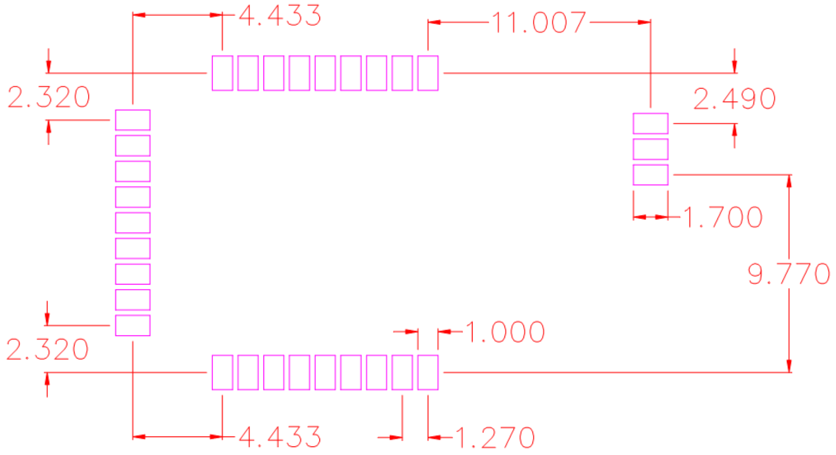
4.433
11.007
2.320
2.490
1.700
9.770
2.320
1.000
4.433
1.270

3.4. DC Characteristics

Characteristics xE50	**Min.**	**Typ.**	**Max.**
Power Supply (VDD):	+2.0V	+3.3V	+3.6V
Consumption			
xE50-433 - Transmission @ 10mW:		33mA	38mA
xE50-868 - Transmission @ 25mW:		45mA	50mA
Reception :		26mA	30mA
Stand-by (32.768 khz On) :		1.5µA	3µA
Sleep (wake up on interruption) :		<1µA	1µA
I/O low level :	GND	-	0.2x V_{DD}
I/O high level :	0.8x V_{DD}	-	V_{DD}

3.5. LE50-433 Functional Characteristics

ERC/REC70-03 Frequency (MHz)	**Band 1f 433.050 – 434.790**		
Global			
RF data rate	9.6 kbps	38.4 kbps	115.2 kbps
Numbers of channels	8	8	4
Channel width	200 kHz	200 kHz	400 kHz
Channel 0	433.2 MHz	433.2 MHz	433.3 MHz
Total Bandwidth	1.74 MHz		
Transmission			
Duty cycle	Band 1f : ≤ 10% Band 1f1 : 100%		
Modulation	GFSK with ± 7 kHz deviation	GFSK with ± 20 kHz deviation	GFSK with ± 50 kHz deviation
Max permitted e.r.p	Band 1f : 10 mW Band 1f1 : 1mW		
e.r.p	8 levels steps from -8dBm to +14dBm		
	Up to 25 mW		
Reception			
Sensitivity for PER < 10^{-3}	-109 dBm	-105 dBm	-101 dBm
Remaining PER	$< 1.10^{-6}$		
Saturation for PER < 10^{-3}	Up to - 10 dBm		

<table>
<tr><th colspan="13">ETSI EN 300 220 V2.3.1 (2009-12)</th></tr>
<tr><th colspan="13">Transmission</th></tr>
<tr><td>Frequency error</td><td colspan="12">+/- 12.5 kHz @ 25 kHz channelization
+/- 87 kHz (100 ppm) > 25 kHz channelization</td></tr>
<tr><td>ACP</td><td colspan="12">- 37 dBm in 16 kHz BW under normal test conditions
- 32 dBm in 16 kHz BW under extreme test conditions</td></tr>
<tr><td rowspan="5">Modulation bandwidth</td><td colspan="3">Reference Bandwidth (RBW)</td><td colspan="3">Limit</td><td colspan="3">Lower envelope point Minimum frequency</td><td colspan="3">Upper envelope point maximum frequency</td></tr>
<tr><td colspan="3">1 kHz</td><td colspan="3">- 30 dBm (1 µW)</td><td colspan="3">$f_{e,\ lower}$</td><td colspan="3">$f_{e,\ upper}$</td></tr>
<tr><td colspan="3">1 kHz</td><td colspan="3">- 36 dBm (250 nW)</td><td colspan="3">($f_{e,\ lower}$ – 200 kHz)</td><td colspan="3">($f_{e,\ upper}$ + 200 kHz)</td></tr>
<tr><td colspan="3">10 kHz</td><td colspan="3">- 36 dBm (250 nW)</td><td colspan="3">($f_{e,\ lower}$ – 400 kHz)</td><td colspan="3">($f_{e,\ upper}$ + 400 kHz)</td></tr>
<tr><td colspan="3">100 kHz</td><td colspan="3">- 36 dBm (250 nW)</td><td colspan="3">($f_{e,\ lower}$ – 1 MHz)</td><td colspan="3">($f_{e,\ upper}$ + 1 MHz)</td></tr>
<tr><td rowspan="4">Unwanted emissions in the spurious domain</td><td colspan="3">Frequency</td><td colspan="3" rowspan="2">47 MHz to 74 MHz 7,5 MHz to 118 MHz 174 MHz to 230 MHz 470 MHz to 862 MHz</td><td colspan="3" rowspan="2">Other frequencies below 1 000 MHz</td><td colspan="3" rowspan="2">Frequencies above 1 000 MHz</td></tr>
<tr><td colspan="3">State</td></tr>
<tr><td colspan="3">Operating</td><td colspan="3">- 54 dBm (4 nW)</td><td colspan="3">- 36 dBm (250 nW)</td><td colspan="3">- 30 dBm (1 µW)</td></tr>
<tr><td colspan="3">Standby</td><td colspan="3">- 57 dBm (2 nW)</td><td colspan="3">- 57 dBm (2 nW)</td><td colspan="3">- 47 dBm (20 nW)</td></tr>
<tr><th colspan="13">Reception</th></tr>
<tr><td rowspan="7">Blocking for class 2 equipments</td><td colspan="4">Frequency offset of the unwanted signal</td><td colspan="4">Receiver bandwidth</td><td colspan="4">Minimum offset between wanted and unwanted signals</td></tr>
<tr><td colspan="4" rowspan="3">+/-2 MHz</td><td colspan="4">10 kHz</td><td colspan="4">≥ 37 dB</td></tr>
<tr><td colspan="4">100 kHz</td><td colspan="4">≥ 27 dB</td></tr>
<tr><td colspan="4">250 kHz</td><td colspan="4">≥ 23 dB</td></tr>
<tr><td colspan="4" rowspan="3">+/-10 MHz</td><td colspan="4">10 kHz</td><td colspan="4">≥ 62 dB</td></tr>
<tr><td colspan="4">100 kHz</td><td colspan="4">≥ 52 dB</td></tr>
<tr><td colspan="4">250 kHz</td><td colspan="4">≥ 48 dB</td></tr>
<tr><td rowspan="2">spurious radiation</td><td colspan="6">Below 1000 MHz</td><td colspan="6">Above 1000 MHz</td></tr>
<tr><td colspan="6">- 57 dBm (2 nW)</td><td colspan="6">- 47 dBm (20 nW)</td></tr>
</table>

3.6. LE50-868 Functional Characteristics

ERC/REC70-03 Frequency (MHz)	**Band g 863.000 - 870.000**	**Band g1 868.000 -868.600**	**Band g2 868.700 - 869.200**	**Band g3 869.400 - 869.650**	**Band g4 869.700 -870.000**
Global					
RF data rate	(1): 4.8 kbps (2): 9.6 kbps				
Numbers of channels	60 (1) 60 (2)	12 (1) 12 (2)	10 (1) 10 (2)	1 (1) 1 (2)	6 (1) 6 (2)
Channel width	50 kHz	50 kHz	50 kHz	250 kHz	50 kHz
Channel 0	865.025 MHz	868.025 MHz	868.725 MHz	869.525 MHz	869.725 MHz
Total Bandwidth	3 MHz	600 kHz	500 kHz	250 kHz	300 kHz
Transmission					
Duty cycle	≤ 1%	≤ 1%	≤ 0.1%	≤ 10%	No requirement
Modulation	GFSK with ±7 kHz deviation (1) GFSK with ±7 kHz deviation (2)				
Max permitted e.r.p	25 mW	25 mW	25 mW	500 mW	5 mW
e.r.p	8 levels from -8dBm to +14dBm (except for g4 band, 6 levels from -8dBm to 7dBm)				
	25 mW	25 mW	25 mW	25 mW	5 mW
Reception					
Sensitivity for PER < 10^{-3}	(1): Max - 109 dBm (2): Max - 108 dBm				
Remaining PER	< 1.10-6				
Saturation for PER < 10^{-3}	Up to - 10 dBm				

ERC/REC70-03 Frequency (MHz)	**Band g** **863.000 - 870.000**	**Band g1** **868.000 -868.600**	**Band g2** **868.700 - 869.200**	**Band g3** **869.400 - 869.650**	**Band g4** **869.700 - 870.000**
Global					
RF data rate	(1): 19.2 kbps (2): 38.4 kbps (3): 115.2 kbps				
Numbers of channels	20 (1) 10 (2) 0 (3)	6 (1) 3 (2) 1 (3)	5 (1) 2 (2) 1 (3)	1 (1) 1 (2) 0 (3)	3 (1) 2 (2) 0 (3)
Channel width	100 kHz (1) 200 kHz (2)	100 kHz (1) 200 kHz (2) 600 kHz (3)	100 kHz (1) 200 kHz (2) 500 kHz (3)	250 kHz	100 kHz (1) 150 kHz (2)
Channel 0	865.550 MHz (1) 865.600 MHz (2)	868.050 MHz (1) 868.100 MHz (2) 868.300 MHz (3)	868.750 MHz (1) 868.850 MHz (2) 868.950 MHz (3)	869.5250 MHz	869.750 MHz (1) 869.775 MHz (2)
Total Bandwidth	2 MHz	600 kHz	500 kHz	250 kHz	300 kHz
Transmission					
Duty cycle	≤ 1%	≤ 1%	≤ 0.1%	≤ 10%	No requirement
Modulation	GFSK with ± 10 kHz deviation (1) GFSK with ± 20 kHz deviation (2) GFSK with ± 50 kHz deviation (3)				
Max permitted e.r.p	25 mW	25 mW	25 mW	500 mW	5 mW
e.r.p	8 levels from -8dBm to +14dBm				
	25 mW	25 mW	25 mW	25 mW	5 mW
Reception					
Sensitivity for PER < 10^{-3}	(1): Max - 104 dBm (2): Max - 101 dBm (3): Max - 99 dBm				
Remaining PER	< 1.10^{-6}				
Saturation for PER < 10^{-3}	Up to - 10 dBm				

<table>
<tr><th colspan="13">ETSI EN 300 220 V2.3.1 (2009-12)</th></tr>
<tr><th colspan="13">Transmission</th></tr>
<tr><td>**Frequency error**</td><td colspan="12">+/- 12.5 kHz @ 25 kHz channelization
+/- 87 kHz (100 ppm) > 25 kHz channelization</td></tr>
<tr><td>**ACP**</td><td colspan="12">- 37 dBm in 16 kHz BW under normal test conditions
- 32 dBm in 16 kHz BW under extreme test conditions</td></tr>
<tr><td rowspan="5">**Modulation bandwidth**</td><td colspan="3">Reference Bandwidth (RBW)</td><td colspan="3">Limit</td><td colspan="3">Lower envelope point
Minimum frequency</td><td colspan="3">Upper envelope point
maximum frequency</td></tr>
<tr><td colspan="3">1 kHz</td><td colspan="3">- 30 dBm (1 µW)</td><td colspan="3">$f_{e, lower}$</td><td colspan="3">$f_{e, upper}$</td></tr>
<tr><td colspan="3">1 kHz</td><td colspan="3">36 dBm (250 nW)</td><td colspan="3">($f_{e, lower}$ – 200 kHz)</td><td colspan="3">($f_{e, upper}$ + 200 kHz)</td></tr>
<tr><td colspan="3">10 kHz</td><td colspan="3">- 36 dBm (250 nW)</td><td colspan="3">($f_{e, lower}$ – 400 kHz)</td><td colspan="3">($f_{e, upper}$ + 400 kHz)</td></tr>
<tr><td colspan="3">100 kHz</td><td colspan="3">- 36 dBm (250 nW)</td><td colspan="3">($f_{e, lower}$ – 1 MHz)</td><td colspan="3">($f_{e, upper}$ + 1 MHz)</td></tr>
<tr><td rowspan="3">**Unwanted emissions in the spurious domain**</td><td colspan="3">Frequency
State</td><td colspan="3">47 MHz to 74 MHz 7,5 MHz to 118 MHz 174 MHz to 230 MHz 470 MHz to 862 MHz</td><td colspan="3">Other frequencies below 1 000 MHz</td><td colspan="3">Frequencies above 1 000 MHz</td></tr>
<tr><td colspan="3">Operating</td><td colspan="3">- 54 dBm (4 nW)</td><td colspan="3">- 36 dBm (250 nW)</td><td colspan="3">- 30 dBm (1 µW)</td></tr>
<tr><td colspan="3">Standby</td><td colspan="3">- 57 dBm (2 nW)</td><td colspan="3">- 57 dBm (2 nW)</td><td colspan="3">- 47 dBm (20 nW)</td></tr>
<tr><th colspan="13">Reception</th></tr>
<tr><td rowspan="7">**Blocking for class 2 equipments**</td><td colspan="4">Frequency offset of the unwanted signal</td><td colspan="4">Receiver bandwidth</td><td colspan="4">Minimum offset between wanted and unwanted signals</td></tr>
<tr><td colspan="4" rowspan="3">+/-2 MHz</td><td colspan="4">10 kHz</td><td colspan="4">≥ 37 dB</td></tr>
<tr><td colspan="4">100 kHz</td><td colspan="4">≥ 27 dB</td></tr>
<tr><td colspan="4">250 kHz</td><td colspan="4">≥ 23 dB</td></tr>
<tr><td colspan="4" rowspan="3">+/-10 MHz</td><td colspan="4">10 kHz</td><td colspan="4">≥ 62 dB</td></tr>
<tr><td colspan="4">100 kHz</td><td colspan="4">≥ 52 dB</td></tr>
<tr><td colspan="4">250 kHz</td><td colspan="4">≥ 48 dB</td></tr>
<tr><td rowspan="2">**spurious radiation**</td><td colspan="6">Below 1000 MHz</td><td colspan="6">Above 1000 MHz</td></tr>
<tr><td colspan="6">- 57 dBm (2 nW)</td><td colspan="6">- 47 dBm (20 nW)</td></tr>
</table>

3.7. NE50-433 Functional Characteristics

ERC/REC70-03 Frequency (MHz)	**Band 1f 433.050 – 434.790**
Global	
RF data rate	38.4 kbps
Numbers of channels	8
Channel width	200 kHz
Channel 0	433.2 MHz
Total Bandwidth	1.74 MHz
Transmission	
Duty cycle	Band 1f : ≤ 10% Band 1f1 : 100%
Modulation	GFSK with ± 40 kHz deviation
Max permitted e.r.p	Band 1f : 10 mW Band 1f1 : 1mW
e.r.p	8 levels from -8dBm to +14dBm
	Up to 25 mW
Reception	
Sensitivity for PER < 10^{-3}	-105 dBm
Remaining PER	< 1.10^{-6}
Saturation for PER < 10^{-3}	Up to - 10 dBm

ETSI EN 300 220 V2.3.1 (2009-12)				
Transmission				
Frequency error	+/- 12.5 kHz @ 25 kHz channelization +/- 87 kHz (100 ppm) > 25 kHz channelization			
ACP	- 37 dBm in 16 kHz BW under normal test conditions - 32 dBm in 16 kHz BW under extreme test conditions			
Modulation bandwidth	Reference Bandwidth (RBW)	Limit	Lower envelope point Minimum frequency	Upper envelope point maximum frequency
	1 kHz	- 30 dBm (1 μW)	$f_{e, lower}$	$f_{e, upper}$
	1 kHz	- 36 dBm (250 nW)	($f_{e, lower}$ – 200 kHz)	($f_{e, upper}$ + 200 kHz)
	10 kHz	- 36 dBm (250 nW)	($f_{e, lower}$ – 400 kHz)	($f_{e, upper}$ + 400 kHz)
	100 kHz	- 36 dBm (250 nW)	($f_{e, lower}$ – 1 MHz)	($f_{e, upper}$ + 1 MHz)
Unwanted emissions in the spurious domain	Frequency State	47 MHz to 74 MHz 7,5 MHz to 118 MHz 174 MHz to 230 MHz 470 MHz to 862 MHz	Other frequencies below 1 000 MHz	Frequencies above 1 000 MHz
	Operating	- 54 dBm (4 nW)	- 36 dBm (250 nW)	- 30 dBm (1 μW)
	Standby	- 57 dBm (2 nW)	- 57 dBm (2 nW)	- 47 dBm (20 nW)
Reception				
Blocking for class 2 equipments	Frequency offset of the unwanted signal	Receiver bandwidth	Minimum offset between wanted and unwanted signals	
	+/-2 MHz	10 kHz	≥ 37 dB	
		100 kHz	≥ 27 dB	
		250 kHz	≥ 23 dB	
	+/-10 MHz	10 kHz	≥ 62 dB	
		100 kHz	≥ 52 dB	
		250 kHz	≥ 48 dB	
spurious radiation	Below 1000 MHz	Above 1000 MHz		
	- 57 dBm (2 nW)	- 47 dBm (20 nW)		

3.8. NE50-868 Functional Characteristics

ERC/REC70-03 Frequency (MHz)	**Band g** **863.000 - 870.000**	**Band g1** **868.000 -868.600**	**Band g2** **868.700 - 869.200**	**Band g3** **869.400 - 869.650**	**Band g4** **869.700 - 870.000**
Global					
RF data rate	38.4 kbps				
Numbers of channels	10	1	1	1	0
Channel width	200kHz	250kHz	250kHz	250kHz	-
Channel 0	865.6 MHz	868.300 MHz	869.000 MHz	869.525 MHz	-
Total Bandwidth	7 MHz	600 kHz	500 kHz	250 kHz	-
Transmission					
Duty cycle	≤ 1%	≤ 1%	≤ 0.1%	≤ 10%	-
Modulation	GFSK with ± 40 kHz deviation				
Max permitted e.r.p	-	25 mW	25 mW	500 mW	-
e.r.p	8 levels from -8dBm to +14dBm				
	25 mW	25 mW	25 mW	25 mW	5 mW
Reception					
Sensitivity for PER < 10^{-3}	Max - 101 dBm				
Remaining PER	$< 1.10^{-6}$				
Saturation for PER < 10^{-3}	Up to - 10 dBm				

3.9. ME50-868 Functional Characteristics

NOTE: For Wireless Mbus functional characteristics (ME50-868 only) refer to [9] “Wireless M-Bus Part4+Part5 ModeR2 User Guide, to [10] “Wireless M-Bus Part 5 Mode Q User Guide 1vv0300935” and to [12] Telit_Wireless_M-bus_2013_Part4_User_Guide 1vv0300953

3.10. Digital Characteristic

Function	Characteristics
μC	• 32 kB + 4 kB in system programmable flash • 4 kB RAM • 2 kB E^{2}PROM
Serial link	• RS232 TTL Full Duplex • 1200 to 115200 bps • 7 or 8 bits • Parity management • Flow control o None o Software (Xon/Xoff) o Hardware (RTS/CTS)
Embedded software functionality	• 3 variants o Star Network Telit RF proprietary stack o Mesh Low power Telit RF proprietary stack o W-MBUS stack • Flexibility: o Pre flashed o Customization capability o Download over the air

3.11. Absolute Maximum Ratings

Voltage applied to Vcc, V_{DD} :	-0.3V to +3.6V
Voltage applied to “TTL” Input :	-0.3V to V_{DD}+0.3V

3.12. Ordering Information

The following equipments can be ordered:

- The SMD version (LE50-433, LE50-868, NE50-433, NE50-868, ME50-868)
- The DIP interface version (LE50-433, LE50-868, NE50-433, NE50-868, ME50-868)
- The Demo Kit (LE50-433, LE50-868) composed by n.2 evaluation boards, n.2 DIP interface boards, RF antennas, serial cables, batteries.
- The Demo Case (for ME50-868) composed by n.3 evaluation boards, n.3 DIP interface boards, RF antennas, serial cables, batteries.
- The Demo Case (NE50-433, NE50-868) composed by n.4 evaluation boards, n.4 DIP interface boards, RF antennas, serial cables, batteries.

Equipment and Part Number
SMD Version
LE50-433, LE50-868, NE50-433, NE50-868, ME50-868
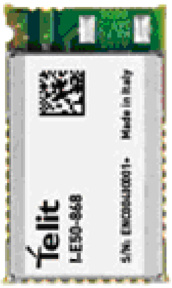
DIP Version
LE50-433, LE50-868, NE50-433, NE50-868, ME50-868

Demo Kit
D LE50 DemoKit
Demo Case
D NE50 DemoCase, D ME50 DemoCase

4. Technical Description

4.1. Module Top View (cover side)

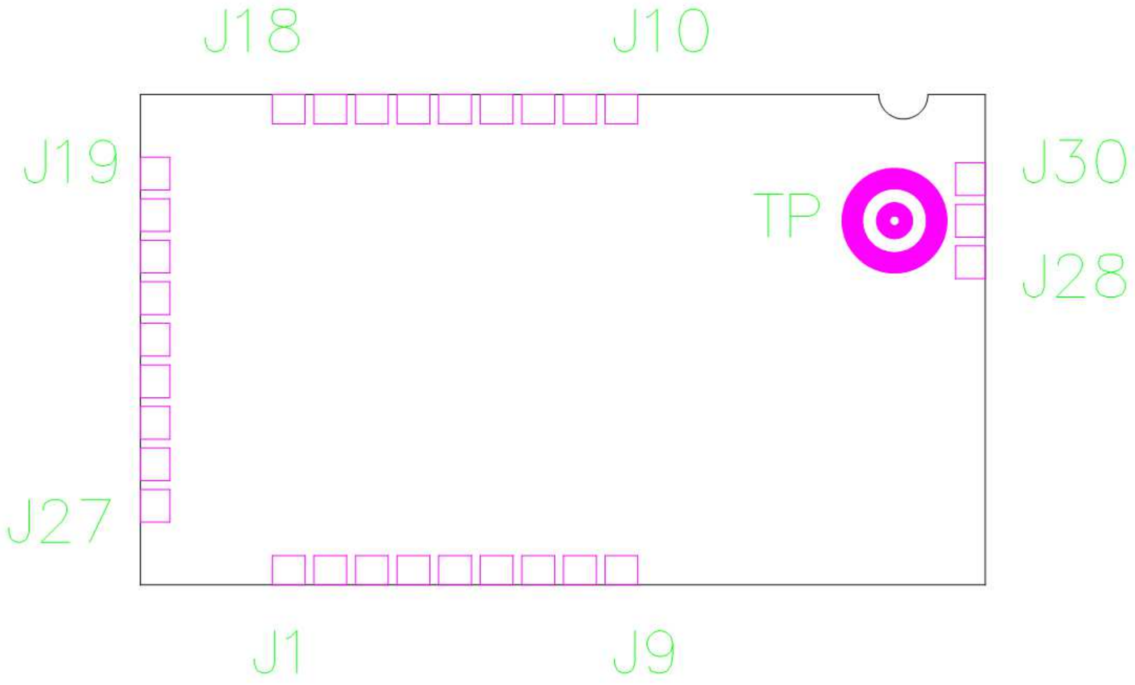

CAUTION: reserved pins must not be connected

CAUTION: In case you want to use in the same application Telit ZE51 or ZE61 modules J9 and J8 should not be connected, since reserved on these modules (see foot notes on Pin-Out tables.

4.2. Pin-out of the module LE50-433 and LE50-868

Pin	*Pin name*	*Pin type*	*Signal level*	*Function*
J30	GND	Gnd		RF Ground connection for external antenna
J29	Ext_Antenna	RF		RF I/O connection to external antenna
J28	GND	Gnd		RF Ground connection for external antenna
J27	GND	Gnd		Ground
J26	GND	Gnd		Ground
J25	VDD	Power		Digital and Radio part power supply pin
J24	CTS	I	TTL	Clear To Send
J23	RESET	I	TTL	µC reset (Active low with internal pull-up)
J22	RTS	O	TTL	Request To Send
J21	RXD	I	TTL	RxD UART – Serial Data Reception
J20	GND	Gnd		Ground
J19	TXD	O	TTL	TxD UART – Serial Data Transmission
J18	STAND_BY	I	TTL	Standby (Active high with internal pull-down: when set to 1 the module is put in stand-by)
J17	GND	Gnd		Ground
J16	PROG	I	TTL	Signal for serial µC flashing (Active high with internal pull-down)
J15	GND	Gnd		Ground
J14	PDI_DATA	I/O	TTL	Program and Debug Interface DATA
J13	GND	Gnd		Ground
J12	GND	Gnd		Ground
J11	GND	Gnd		Ground
J10	PDI_CLK	I	TTL	Program and Debug Interface CLOCK
J9	IO9[1]	I/O	TTL	Digital I/O N°9 with interrupt
	Status TX/RX	O	TTL	See reference document **[5] Star Network Protocol Stack User Guide**
J8	IO8_AD_DA[2]	I/O	TTL	Digital I/O N°8 with interrupt
	ACK TX	O	TTL	See reference document **[5] Star Network Protocol Stack User Guide**
J7	IO7_A	I/O	TTL	Digital I/O N°7 with interrupt
J6	IO6_A	I/O	analog	ADC - Analog Input N°6 (Logic I/O capability)
J5	IO5_A	I/O	analog	ADC - Analog Input N°5 (Logic I/O capability)
J4	IO4_A	I/O	analog	ADC - Analog Input N°4 (Logic I/O capability)
J3	IO3_A	I/O	analog	ADC - Analog Input N°3 (Logic I/O capability)
J2	IO2_P	I/O	TTL	Logic I/O N°2 with interrupt
	RX LED	O	TTL	See reference document **[5] Star Network Protocol Stack User Guide**
J1	IO1_P	I/O	TTL	Logic I/O N°1 with interrupt
	TX LED	O	TTL	See reference document **[5] Star Network Protocol Stack User Guide**

[1, 2] In case you want to use in the same application Telit ZE51 or ZE61 modules J9 and J8 should not be connected, since reserved on these modules.

4.3. Pin-out of the module NE50-433 and NE50-868

Pin	***Pin name***	***Pin type***	***Signal level***	***Function***
J30	GND	Gnd		RF Ground connection for external antenna
J29	Ext_Antenna	RF		RF I/O connection to external antenna
J28	GND	Gnd		RF Ground connection for external antenna
J27	GND	Gnd		Ground
J26	GND	Gnd		Ground
J25	VDD	Power		Digital and Radio part power supply pin
J24	CTS	I	TTL	Clear To Send
J23	RESET	I	TTL	µC reset (Active low with internal pull-up)
J22	RTS	O	TTL	Request To Send
J21	RXD	I	TTL	RxD UART – Serial Data Reception
J20	GND	Gnd		Ground
J19	TXD	O	TTL	TxD UART – Serial Data Transmission
J18	WAKEUP	I	TTL	Wake-up (Active high with internal pull-down: when set to 1 the module is awakened)
J17	GND	Gnd		Ground
J16	PROG	I	TTL	Signal for serial µC flashing (Active high with internal pull-down)
J15	GND	Gnd		Ground
J14	PDI_DATA	I/O	TTL	Program and Debug Interface DATA
J13	GND	Gnd		Ground
J12	GND	Gnd		Ground
J11	GND	Gnd		Ground
J10	PDI_CLK	I	TTL	Program and Debug Interface CLOCK
J9	IO9[3]	I/O	TTL	Digital I/O.
J8	IO8_AD_DA[4]	I/O	analog	Digital I/O. Analog Input and Interrupt Input capable. (Logic I/O capability)
J7	IO7_A	I/O	analog	Digital I/O. Analog Input and Interrupt Input capable. (Logic I/O capability)
J6	IO6_A	I/O	analog	Digital I/O. Analog Input and Interrupt Input capable. (Logic I/O capability)
J5	IO5_A	I/O	analog	Digital I/O. Analog Input and Interrupt Input capable. (Logic I/O capability)
J4	IO4_A	I/O	analog	Digital I/O. Analog Input and Interrupt Input capable. (Logic I/O capability)
J3	IO3_A	I/O	analog	Digital I/O. Analog Input and Interrupt Input capable. (Logic I/O capability)
J2	STANDBY STATUS	O	TTL	Signal indicating stand-by status.
J1	ASSO	O	TTL	ASSO - Signal indicating association status.

---

[3], [4] In case you want to use in the same application Telit ZE51 or ZE61 modules J9 and J8 should not be connected, since reserved on these modules.

4.4. Pin-out of the module ME50-868

Pin	*Pin name*	*Pin type*	*Signal level*	*Function*
J30	GND	Gnd		RF Ground connection for external antenna
J29	Ext_Antenna	RF		RF I/O connection to external antenna
J28	GND	Gnd		RF Ground connection for external antenna
J27	GND	Gnd		Ground
J26	GND	Gnd		Ground
J25	VDD	Power		Digital and Radio part power supply pin
J24	CTS	I	TTL	Clear To Send
J23	RESET	I	TTL	µC reset (Active low with internal pull-up)
J22	RTS	O	TTL	Request To Send
J21	RXD	I	TTL	RxD UART – Serial Data Reception
J20	GND	Gnd		Ground
J19	TXD	O	TTL	TxD UART – Serial Data Transmission
J18	WAKEUP	I	TTL	Wake-up (Active high with internal pull-down: when set to 1 the module is awakened)
J17	GND	Gnd		Ground
J16	PROG	I	TTL	Signal for serial µC flashing (Active high with internal pull-down)
J15	GND	Gnd		Ground
J14	PDI_DATA	I/O	TTL	Program and Debug Interface DATA
J13	GND	Gnd		Ground
J12	GND	Gnd		Ground
J11	GND	Gnd		Ground
J10	PDI_CLK	I	TTL	Program and Debug Interface CLOCK
J9	IO9[5]	I/O	TTL	Digital I/O N°9 with interrupt
J8	IO8_AD_DA[6]	I/O	analog	A to D and D to A I/O N°8 with interrupt (Logic I/O capability)
J7	IO7_A	I/O	analog	Analog Input N°7 (Logic I/O capability)
J6	IO6_A	I/O	analog	Analog Input N°6 (Logic I/O capability)
J5	IO5_A	I/O	analog	Analog Input N°5 (Logic I/O capability)
J4	IO4_A	I/O	analog	Analog Input N°4 (Logic I/O capability)
J3	IO3_A	I/O	analog	Analog Input N°3 (Logic I/O capability)
J2	STANDBY STATUS	O	TTL	Signal indicating stand-by status
J1	RADIO STATUS	O	TTL	Signal indicating reception or transmission of radio frame

---

[5, 6] In case you want to use in the same application Telit ZE51 or ZE61 modules J9 and J8 should not be connected, since reserved on these modules.

4.5. Pin-out of the DIP Module

Version 1

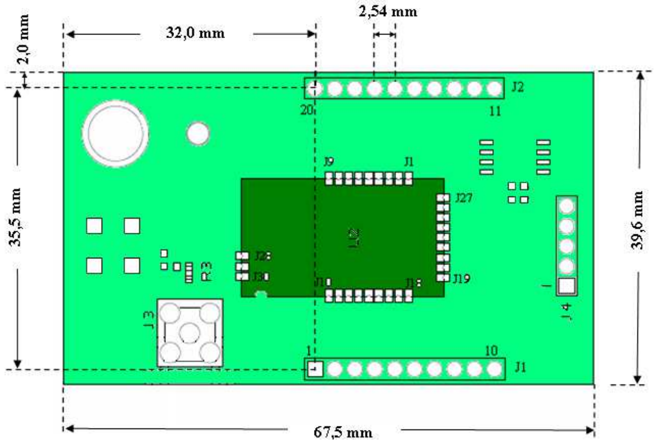
2,0 mm
32,0 mm
2,54 mm
35,5 mm
39,6 mm
67,5 mm
J1
J2
J3
J4
J9
J27
J19
U1
R3
20
11
1
10

Version 2

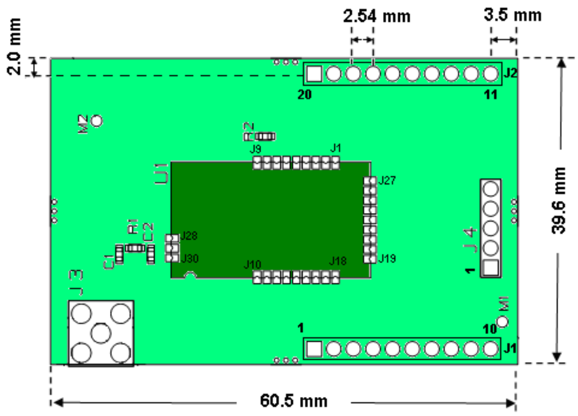
2.0 mm
2.54 mm
3.5 mm
39.6 mm
60.5 mm
J1
J2
J3
J4
J9
J10
J18
J19
J27
J28
J30
U1
M1
M2
R1
R2
C1
C2
20
11
1
10

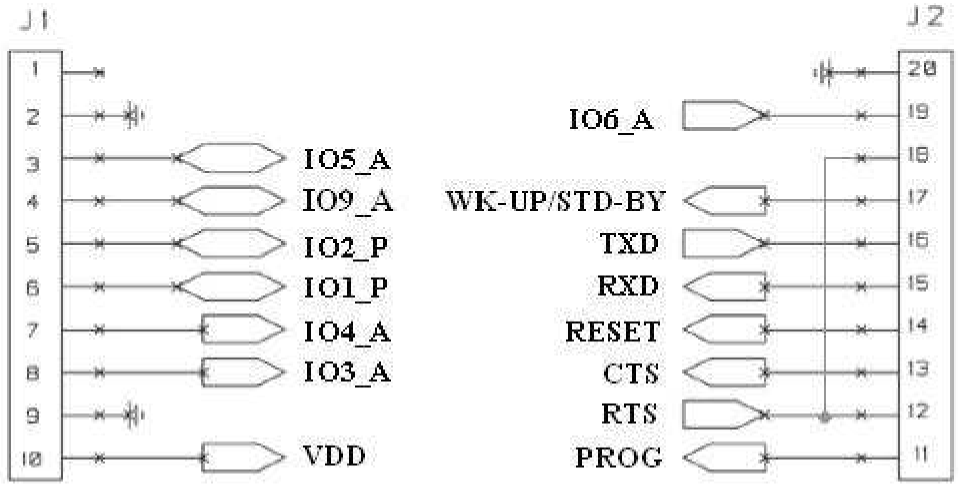
J1
1
2
3 IO5_A
4 IO9_A
5 IO2_P
6 IO1_P
7 IO4_A
8 IO3_A
9
10 VDD
J2
20
19 IO6_A
18
17 WK-UP/STD-BY
16 TXD
15 RXD
14 RESET
13 CTS
12 RTS
11 PROG

4.6. Description of the signals

Signals	Description
Reset	External hardware reset of the radio module. Active on low state.
TXD, RXD	Serial link signals, format NRZ/TTL: TXD is for outgoing data. RXD is for incoming data. The ‘1’ is represented by a high state.
CTS	Incoming signal. Indicates whether the module can send serial data to user (Active, on low state) or not (inactive, on high state).
RTS	Outgoing signal. Indicates whether the user can transmit serial data (active, on low state) or not (inactive, on high state).
IO	I/O, configurable as input or as output. See reference document **[7]** for LE50-868. Available upon request for NE50-433, NE50-868 and ME50-868
STANDBY (LE50-433/868)	Input signal which indicates to the module to switch to pre-selected low-power mode. See reference document **[7]** for LE50-433/868
WAKEUP (NE50-433/868, ME50-868)	Input signal which indicates to the module to wake up from low-power mode. See reference document document **[8]** for NE50-433/868 and document **[9]** for ME50-868..
TX LED (LE50-433 and LE50-868 only)	Output signal set to VCC during radio transmission and set to GND the rest of the time
RX LED (LE50-433 and LE50-868 only)	Output signal set to VCC as soon as a radio frame is detected with correct synchronization word. The signal returns to GND as soon as the frame reception is finished
ACK TX (LE50-433 and LE50-868 only)	In Addressed Secured mode, this signal rises to VCC when an ACK hasn’t been received after frame transmission and repetition. This is the hardware version of “ERROR” serial message. It stays at VCC until next success addressed secured transmission
STATUS TX/RX (LE50-433 and LE50-868 only)	Output signal which indicates the status of the serial port. When serial port is transmitting, Status RX/TX signal goes VCC until the end of serial transmission. The signal stays to GND the rest of the time
ASSO (NE50-868 and NE50-433 only)	The ‘ASSO’ output signal is set to logical ‘1’ continuously when the module is connected to the network. The output signal value changes fast when the module is not connected to the network and the value changes slowly when a valid network has been found and the device is looking for the best parent into this network.
STANDBY STATUS (NE50-433/868 and ME50-868 only)	The ‘STAND BY STATUS’ output signal is set to logical ‘1’ while the module is operating and return to ‘0’ during stand by periods.

5. Process Information

5.1. Delivery

xE50-433/868 modules are delivered in plastic tray packaging, each tray including 50 units. The dimensions of the tray are the following: 329 mm x 176 mm x 5.6 mm. Each unit is placed in a 26.6 mm x 16 mm location. An empty tray weights 45 g and a loaded tray weights around 130 g.

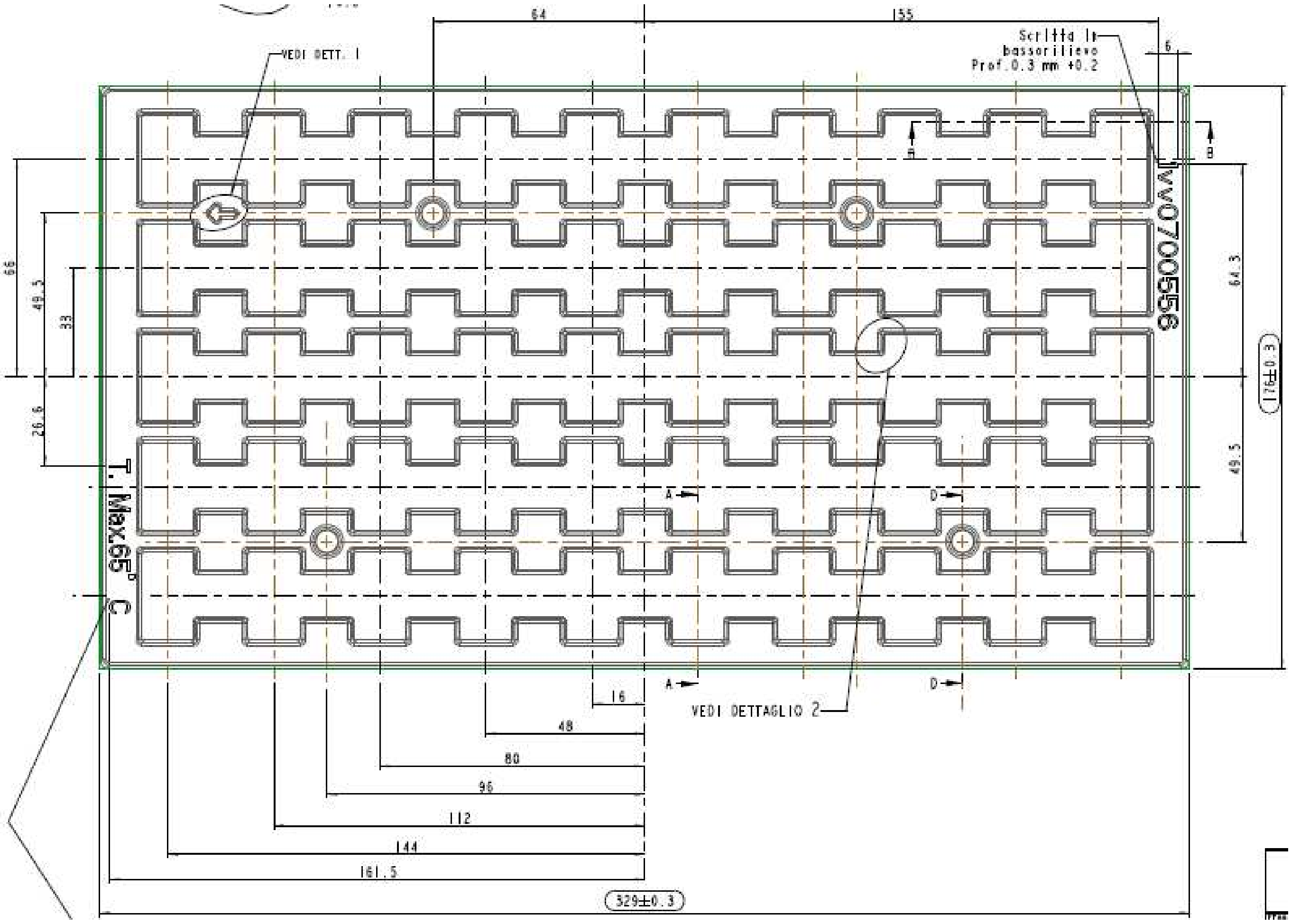
64
155
Scritta in
bassorilievo
Prof.0.3 mm +0.2
6
VEDI DETT. 1
A
B
66
49.5
33
26.6
VV0700556
64.3
176±0.3
49.5
T.Max65°C
A
D
A
D
16
48
80
96
112
144
161.5
VEDI DETTAGLIO 2
329±0.3

5.2. Storage

The optimal storage environment for ME70-169 modules should be dust free, dry and the temperature should be included between -40°C and +85°C.

5.3. Moisture sensibility

The level of moisture sensibility of the Product is “3” according with standard IPC/JEDEC JSTD-020, take care of all the relative requirements for using this kind of components.
Moreover, the customer has to take care of the following conditions:

a) The shelf life of the Product inside of the dry bag must be 12 months from the bag seal date,
b) when stored in a non-condensing atmospheric environment of <= 30°C / 60% RH according to IPC/JEDEC J-STD-033A paragraph 5
c) The maximum time between the opening of the sealed bag and the reflow process must be 168 hours if condition b) “IPC/JEDEC J-STD-033A paragraph 5.2” is respected
d) Baking is required if conditions b) or c) are not respected
e) Baking is required if the humidity indicator inside the bag indicates 10% RH or more.

5.4. Additional Precautions

Also, it must be noted that due to some components, ME70-169 modules are ESD sensitive device. Therefore, ESD handling precautions should be carefully observed.

5.5. Soldering pad pattern

The surface finished on the printed circuit board pads should be made of Nickel/Gold surface.

The recommended soldering pad layout on the host board for the xE50-433/868 is shown in the diagram below:

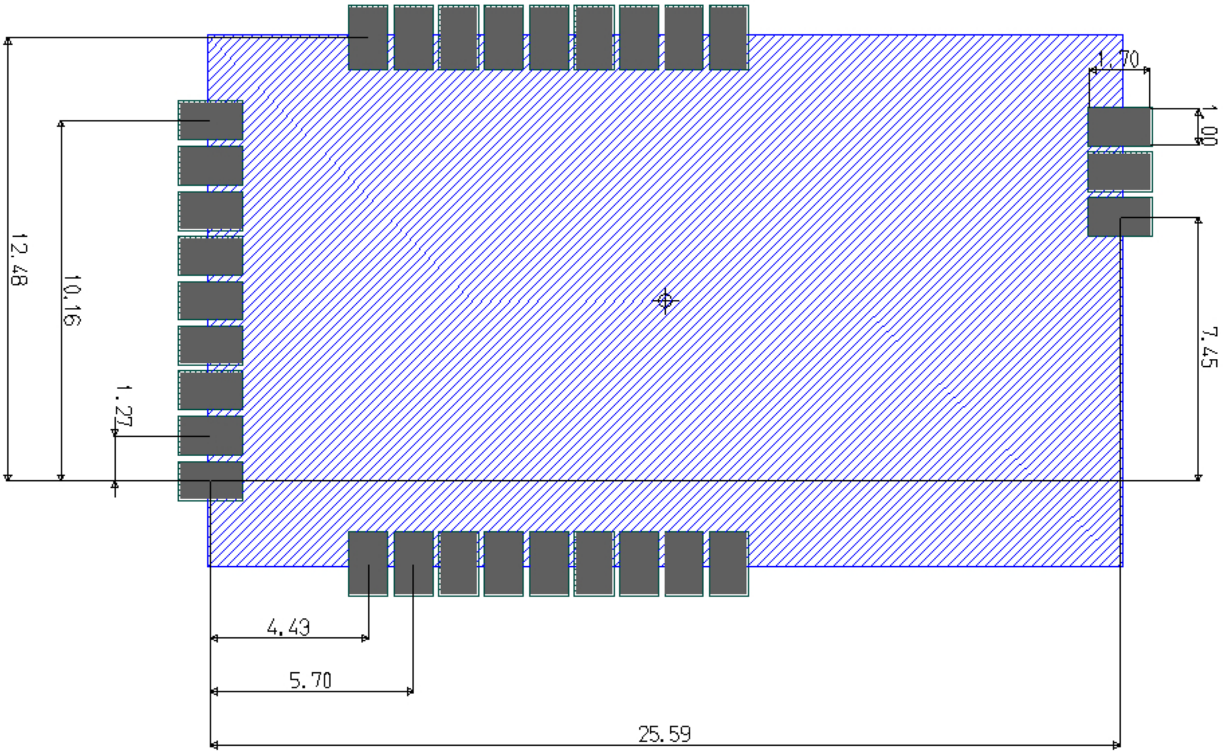

All dimensions in mm

Neither via-holes nor wires are allowed on the PCB upper layer in area occupied by the module.

5.6. Solder paste

xE50-433/868 module is designed for surface mounting using half-moon solder joints (see diagram below). For proper module assembly, solder paste must be printed on the target surface of the host board. Stencil apertures layout can have the same dimensions as the copper pads.
The solder paste should be eutectic and made of 95.5% of SN, 4% of Ag and 0.5% of Cu. The recommended solder paste height is 180 μm .
The following diagram shows mounting characteristics for ME integration on host PCB:

5.7. PCB pad design

Non-Solder Mask Defined (NSMD) type is recommended for the solder pads on the host pcb:

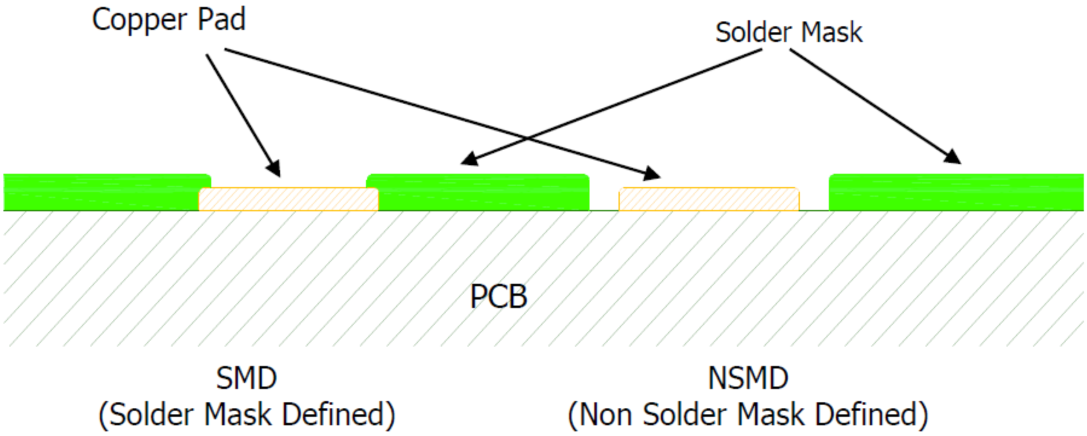
Copper Pad
Solder Mask
PCB
SMD
(Solder Mask Defined)
NSMD
(Non Solder Mask Defined)

5.8. PCB pad dimensions

The recommended PCB pad dimensions are described in the following picture: as can be seen, solder mask apertures are 0.1mm larger than the copper pad:

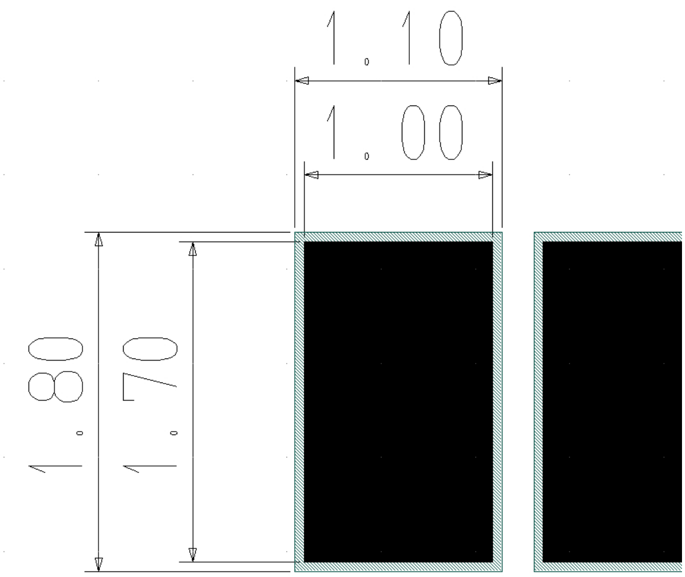
1.10
1.00
1.80
1.70

5.9. Placement

The xE50-433/868 module can be automatically placed on host boards by pick-and-place machines like any integrated circuit

5.10. Soldering Profile (RoHS Process)

It must be noted that xE50-433/868 module should not be allowed to be hanging upside down during the reflow operation. This means that the module has to be assembled on the side of the printed circuit board that is soldered last.

The recommendation for lead-free solder reflow in IPC/JEDEC J-STD-020D Standard should be followed.

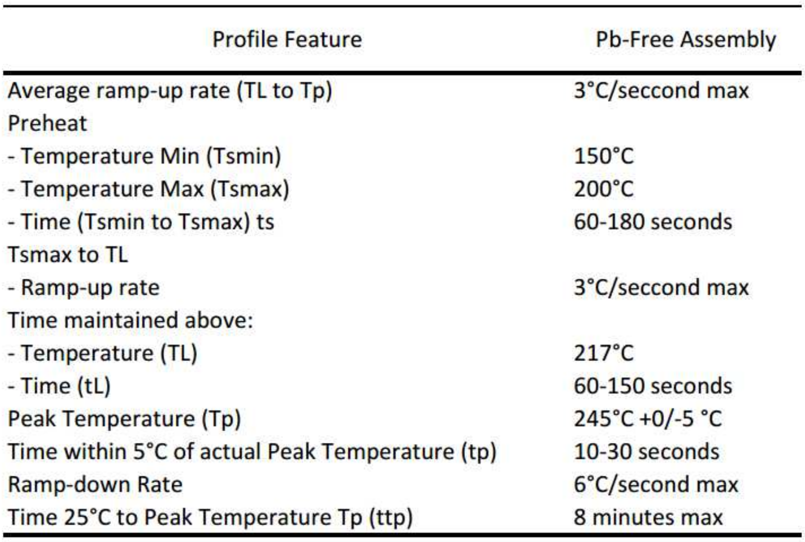

Profile Feature	Pb-Free Assembly
Average ramp-up rate (TL to Tp)	3°C/seccond max
Preheat	
- Temperature Min (Tsmin)	150°C
- Temperature Max (Tsmax)	200°C
- Time (Tsmin to Tsmax) ts	60-180 seconds
Tsmax to TL	
- Ramp-up rate	3°C/seccond max
Time maintained above:	
- Temperature (TL)	217°C
- Time (tL)	60-150 seconds
Peak Temperature (Tp)	245°C +0/-5 °C
Time within 5°C of actual Peak Temperature (tp)	10-30 seconds
Ramp-down Rate	6°C/second max
Time 25°C to Peak Temperature Tp (ttp)	8 minutes max

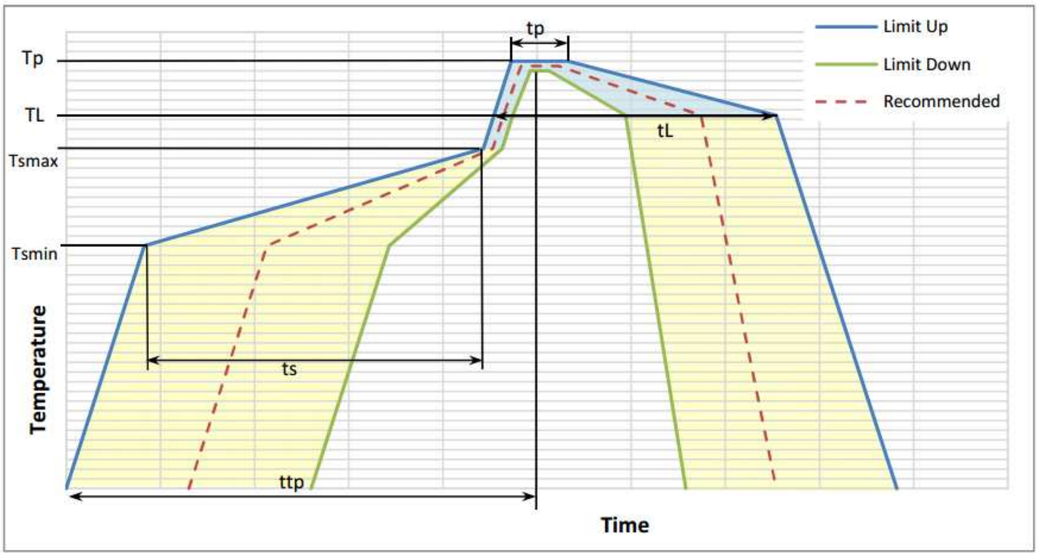

The barcode label located on the module shield is able to withstand the reflow temperature.

---

*CAUTION - **It must also be noted that if the host board is submitted to a wave soldering after the reflow operation, a solder mask must be used in order to protect the xE50-433/868 radio module’s metal shield from being in contact with the solder wave.***

---

6. Board Mounting Recommendation

6.1. Electrical environment

The best performances of the xE50-433/868 module are obtained in a “clean noise” environment. Some basic recommendations must be followed:

- Noisy electronic components (serial RS232, DC-DC Converter, Display, Ram, bus ,...) must be placed as far as possible from the LE50-868 module.

- Switching components circuits (especially RS-232/TTL interface circuit power supply) must be decoupled with a 100 µF tantalum capacitor. And the decoupling capacitor must be as close as possible to the noisy chip.

6.2. Power supply decoupling on xE50-433/868 module

The power supply of xE50-868 module must be nearby decoupled. A LC filter must be placed as close as possible to the radio module power supply pin, VDD .

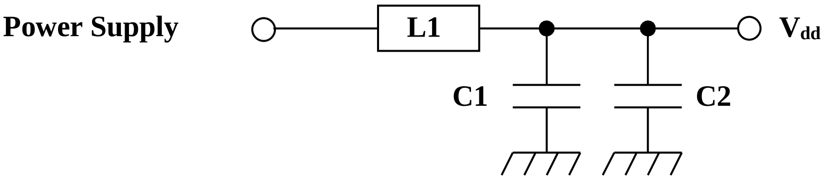

Symbols	Reference	Value	Manufacturer
L1	LQH31MN1R0K03	1µH	Murata
C1	GRM31CF51A226ZE01	22µF	Murata
C2	Ceramic CMS 25V	100nF	Multiple

6.3. RF layout considerations

Basic recommendations must be followed to achieve a good RF layout:

- It is recommended to fill all unused PCB area around the module with ground plane
- The radio module ground pin must be connected to solid ground plane.
- If the ground plane is on the bottom side, a via (Metal hole) must be used in front of each ground pad. Especially J28 and J30 (RF Gnd) pins should be grounded via several holes to be located right next to the pins thus minimizing inductance and preventing mismatch and losses.

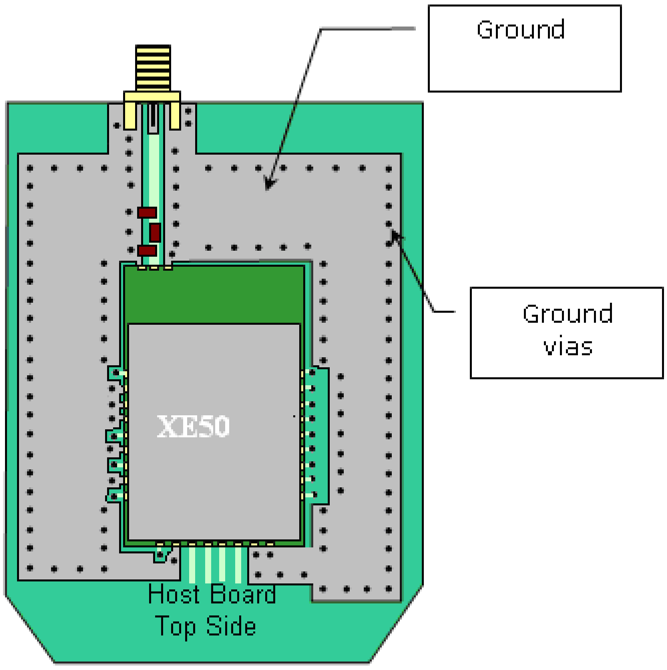

6.4. Antenna connections on printed circuit boards

Special care must be taken when connecting an antenna or a connector to the module. The RF output impedance is 50 ohms, so the strip between the pad and the antenna or connector must be 50 ohms following the tables below. Ground lines should be connected to the ground plane with as many vias as possible, but not too close to the signal line.

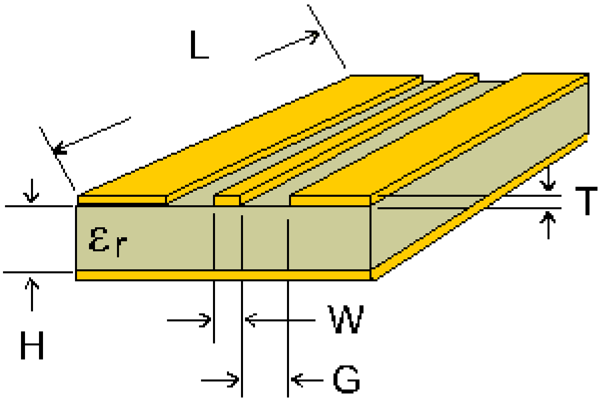

PCB material	PCB thickness H (mm)	Coplanar line W (mm)	Coplanar line G (mm)
FR4	0.8	1	0.3
	1.6	1	0.2

Table 1 : Values for double face PCB with ground plane around and under coplanar wave guide (recommended)

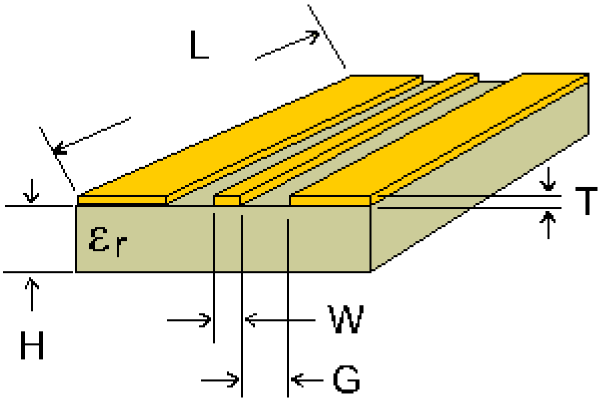

PCB material	PCB thickness H (mm)	Coplanar line W (mm)	Coplanar line G (mm)
FR4	0.8	1	0.22
	1.6	1	0.23

Table 2 : Values for simple face PCB with ground plane around coplanar wave guide (not recommended)

6.5. xE50-433/868 Interfacing

Example of a full RS-232 connection between a PC or an Automat (PLC) and xE50-433/868

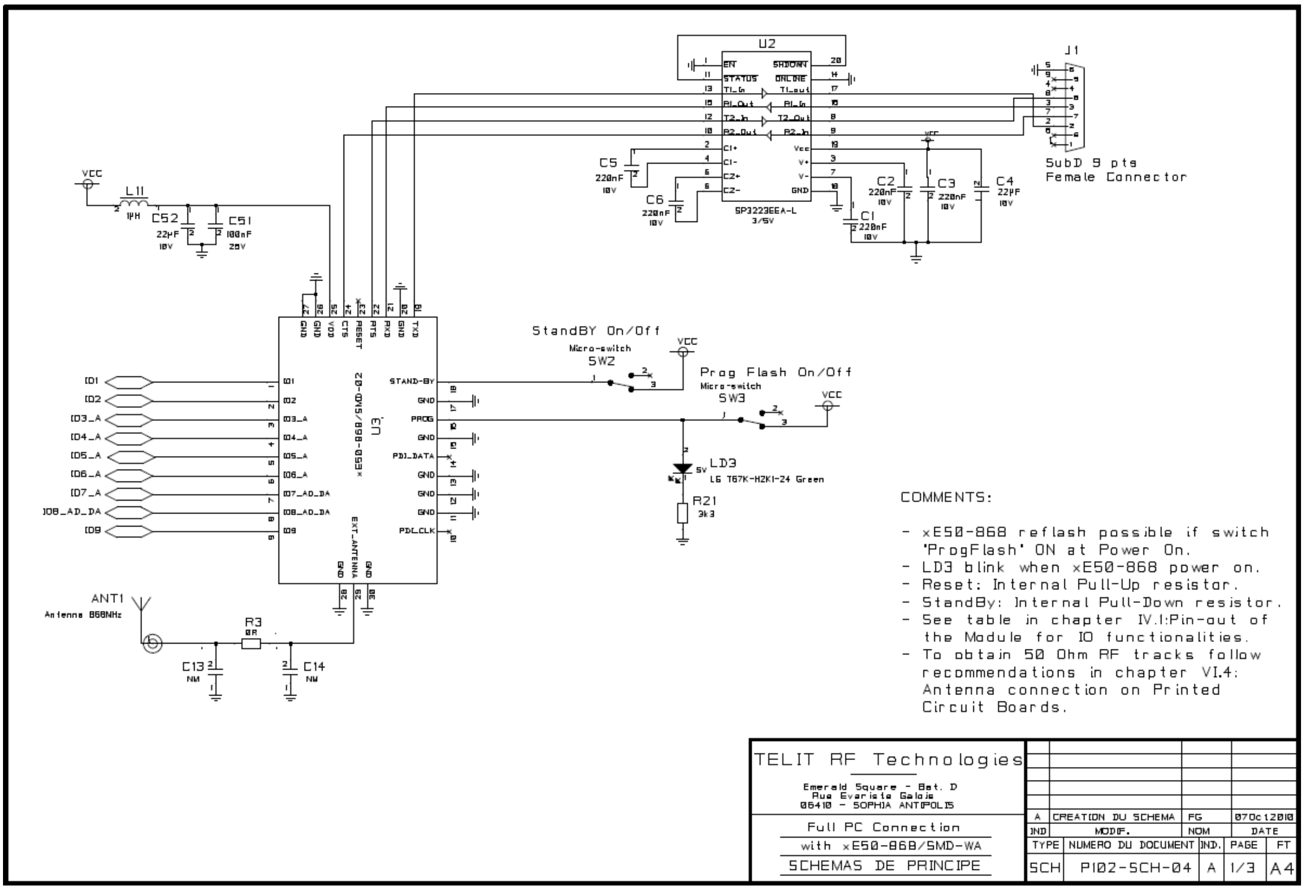
U2
EN
STATUS
T1_In
R1_Out
T2_In
R2_Out
C1+
C1-
C2+
C2-
SHDOWN
ONLINE
T1_out
R1_In
T2_Out
R2_In
Vcc
V+
V-
GND
SP3223EEA-L
3/5V
J1
SubD 9 pts
Female Connector
C5
220nF
10V
C6
220nF
10V
C2
220nF
10V
C3
220nF
10V
C4
22µF
10V
C1
220nF
10V
VCC
L11
1µH
C52
22µF
10V
C51
100nF
25V
U3
xE50-868/SMD-02
GND
VDD
CTS
RESET
RTS
RXD
TXD
STAND-BY
PROG
PDI_DATA
PDI_CLK
EXT_ANTENNA
IO1
IO2
IO3_A
IO4_A
IO5_A
IO6_A
IO7_AD_DA
IO8_AD_DA
IO9
StandBY On/Off
Micro-switch
SW2
Prog Flash On/Off
Micro-switch
SW3
LD3
5V
LG T67K-H2K1-24 Green
R21
3k3
ANT1
Antenna 868MHz
R3
0R
C13
NM
C14
NM
COMMENTS:
- xE50-868 reflash possible if switch 'ProgFlash' ON at Power On.
- LD3 blink when xE50-868 power on.
- Reset: Internal Pull-Up resistor.
- StandBy: Internal Pull-Down resistor.
- See table in chapter IV.1:Pin-out of the Module for IO functionalities.
- To obtain 50 Ohm RF tracks follow recommendations in chapter VI.4: Antenna connection on Printed Circuit Boards.
TELIT RF Technologies
Emerald Square - Bat. D
Rue Evariste Galois
06410 - SOPHIA ANTIPOLIS
Full PC Connection
with xE50-868/SMD-WA
SCHEMAS DE PRINCIPE
A
CREATION DU SCHEMA
FG
07Oct2010
IND
MODIF.
NOM
DATE
TYPE
NUMERO DU DOCUMENT
IND.
PAGE
FT
SCH
P102-SCH-04
A
1/3
A4

7. Annexes

7.1. Examples of propagation attenuation

Factor	433 MHz	868 MHz	2.4 GHz
	Attenuation	Attenuation	Attenuation
Open office	0 dB	0 dB	0 dB
Window	< 1 dB	1 – 2 dB	3 dB
Thin wall (plaster)	3 dB	3 – 4 dB	5 – 8 dB
Medium wall (wood)	4 – 6 dB	5 – 8 dB	10 – 12 dB
Thick wall (concrete)	5 – 8 dB	9 – 11 dB	15 – 20 dB
Armoured wall (reinforced concrete)	10 – 12 dB	12 – 15 dB	20 – 25 dB
Floor or ceiling	5 – 8 dB	9 – 11 dB	15 – 20 dB
Armoured floor or ceiling	10 – 12 dB	12 – 15 dB	20 – 25 dB
Rain and/or Fog	20 – 25 dB	25 – 30 dB	*

* = *Attenuations increase along with the frequency. In some cases, it is therefore difficult to determine loss and attenuation value.*

Note = The table above is only indicative. The real values will depend on the installation environment itself.

7.2. Declaration of conformity

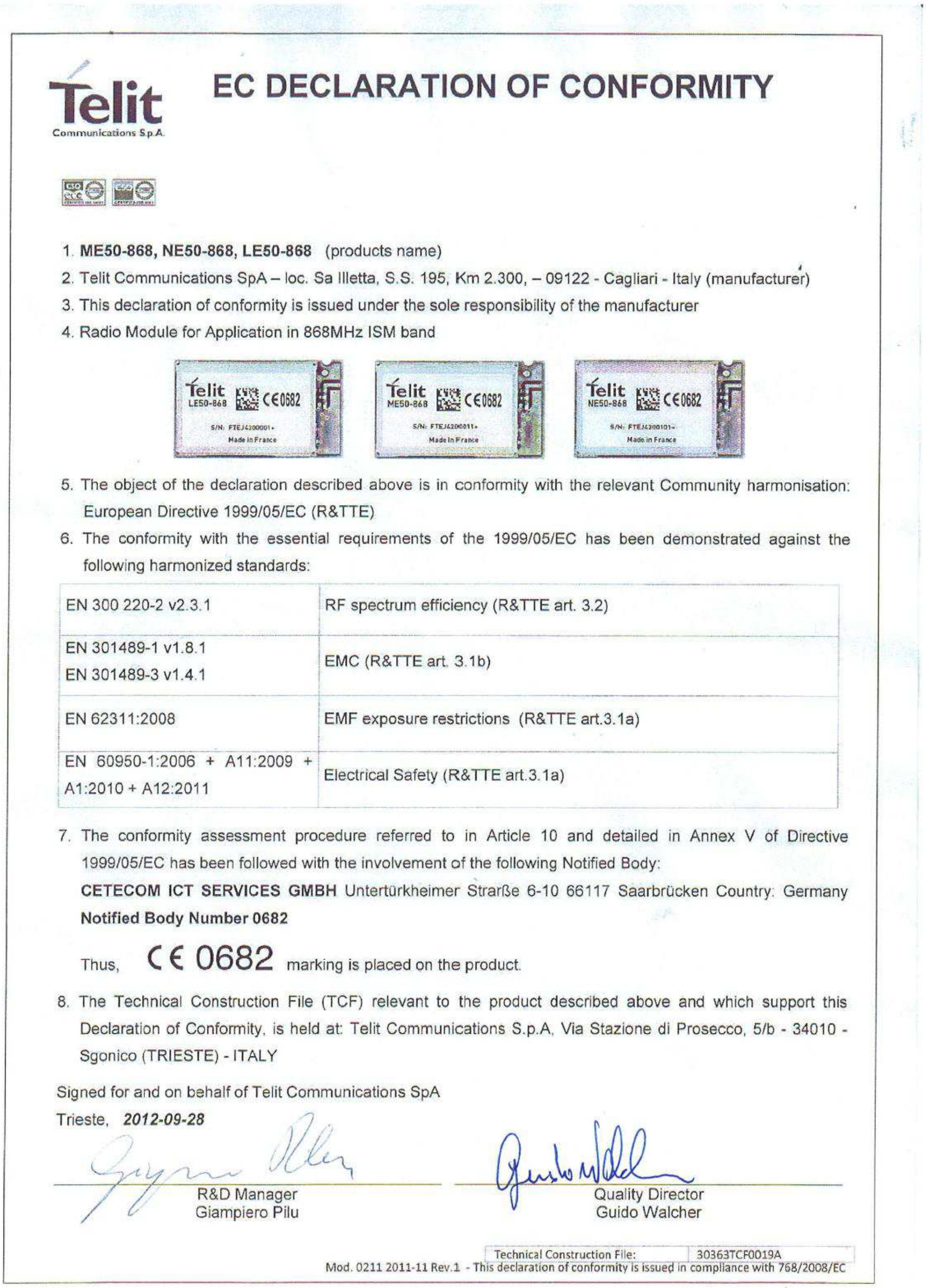

Telit
Communications S.p.A.

EC DECLARATION OF CONFORMITY

1. **ME50-868, NE50-868, LE50-868** (products name)
2. Telit Communications SpA – loc. Sa Illetta, S.S. 195, Km 2.300, – 09122 - Cagliari - Italy (manufacturer)
3. This declaration of conformity is issued under the sole responsibility of the manufacturer
4. Radio Module for Application in 868MHz ISM band
5. The object of the declaration described above is in conformity with the relevant Community harmonisation: European Directive 1999/05/EC (R&TTE)
6. The conformity with the essential requirements of the 1999/05/EC has been demonstrated against the following harmonized standards:

EN 300 220-2 v2.3.1	RF spectrum efficiency (R&TTE art. 3.2)
EN 301489-1 v1.8.1 EN 301489-3 v1.4.1	EMC (R&TTE art. 3.1b)
EN 62311:2008	EMF exposure restrictions (R&TTE art.3.1a)
EN 60950-1:2006 + A11:2009 + A1:2010 + A12:2011	Electrical Safety (R&TTE art.3.1a)

7. The conformity assessment procedure referred to in Article 10 and detailed in Annex V of Directive 1999/05/EC has been followed with the involvement of the following Notified Body:
   CETECOM ICT SERVICES GMBH Untertürkheimer Strarße 6-10 66117 Saarbrücken Country: Germany
   Notified Body Number 0682

   Thus, C€ 0682 marking is placed on the product.
8. The Technical Construction File (TCF) relevant to the product described above and which support this Declaration of Conformity, is held at: Telit Communications S.p.A, Via Stazione di Prosecco, 5/b - 34010 - Sgonico (TRIESTE) - ITALY

Signed for and on behalf of Telit Communications SpA
Trieste, *2012-09-28*

R&D Manager
Giampiero Pilu

Quality Director
Guido Walcher

Technical Construction File:	30363TCF0019A

Mod. 0211 2011-11 Rev.1 - This declaration of conformity is issued in compliance with 768/2008/EC

8. Safety Recommendations

READ CAREFULLY

Be sure the use of this product is allowed in the country and in the environment required. The use of this product may be dangerous and has to be avoided in the following areas:

- Where it can interfere with other electronic devices in environments such as hospitals, airports, aircrafts, etc.
- Where there is risk of explosion such as gasoline stations, oil refineries, etc. It is responsibility of the user to enforce the country regulation and the specific environment regulation.

Do not disassemble the product; any mark of tampering will compromise the warranty validity. We recommend following the instructions of the hardware user guides for a correct wiring of the product.
The product has to be supplied with a stabilized voltage source, Safety Extra Low Voltage, with no energy hazard. The wiring has to be conforming to the security and fire prevention regulations. The product has to be handled with care, avoiding any contact with the pins because electrostatic discharges may damage the product itself.
The system integrator is responsible of the functioning of the final product; therefore, care has to be taken to the external components of the module, as well as of any project or installation issue, because the risk of disturbing external devices or having impact on the security. Should there be any doubt, please refer to the technical documentation and the regulations in force.
When installed in final product, a fire protection enclosure must be provided. Every module has to be equipped with a proper antenna with specific characteristics. The antenna has to be installed with care in order to avoid any interference with other electronic devices and has to guarantee a minimum distance from the body (20 cm).

The European Community provides some Directives for the electronic equipments introduced on the market. All the relevant information's are available on the European Community website:

http://ec.europa.eu/enterprise/sectors/rtte/documents/

The text of the Directive 99/05 regarding telecommunication equipments is available, while the applicable Directives (Low Voltage and EMC) are available at:

http://ec.europa.eu/enterprise/sectors/electrical/

9. Glossary

ACP	Adjacent Channel Power
AFA	Adaptive Frequency Agility
bps	Bits per second
BW	Bandwidth
dB	Decibel
dBm	Power level in decibel milliwatt (10 log (P/1mW))
E^{2}PROM	Electrically Erasable Programmable Read Only Memory
e.r.p	Effective radiated power
ETSI	European Telecommunication Standard Institute
GFSK	Gaussian Frequency Shift Keying
I	Input
ISM	Industrial, Scientific and Medical
kB	KiloByte
kbps	Kilobits per second
kcps	Kilochips per second
kHz	Kilo Hertz
LBT	Listen Before Talk
LGA	Land Grid Array
MHz	Mega Hertz
mW	milliwatt
O	Output
PER	Packet Error Rate
ppm	Parts per million
RAM	Random Access Memory
RF	Radio Frequency
RoHS	Restriction of Hazardous Substances
RxD	Receive Data
SMD	Surface Mounted Device
SRD	Short Range Device
TxD	Transmit Data
UART	Universal Asynchronous Receiver Transmitter
µC	microcontroller

10. Document History

Revision	Date	Changes
0	2011-02-22	First Release
1	2011-05-18	• Updated pin-out table • New DIP module • Adding RF Layout drawing
2	2011-06-23	• Updated Related Documents • Added a table in 3.5
3	2011-07-05	• Updated 2.1 • Updated 3.5
4	2011-07-27	• Users Guides “NE50-868 RF Module User Guide 1vv0300897” and “ME50-868 RF Module User Guide 1vv0300892” are integrated into the present User Guide • Added 7.2
5	2011-08-10	• Updated 1.4 • Updated 3.8 • Updated 3.10 • Updated 4.3 • Updated 4.4
6	2011-09-20	• Name of the present User Guide is updated • LE50-433 module is integrated in the present User Guide • Updated 3.9 • Updated 3.11
7	2011-12-16	• NE50-433 module is integrated in the present User Guide
8	2012-03-14	• Updated J18 Pin description in 4.2 • Updated J2 and J18 Pin name and description in 4.3 • Updated J1, J2, J18 Pin name and description in 4.4 • Updated 4.5 • Updated 4.6
9	2012-06-14	• Updated 3.5 to 3.8 with modified output power level steps • Updated 7.2 • Updated 8
10	2012-09-28	• Updated 7.2
11	2012-06-20	• Updated 3.5 to 3.9 & 1.6 & 2.1& 2.6
12	2015-06-19	• Updated Process Information
13	2015-07-28	• Updated mounting footprint information